SWITCH FUSES 16-32 A
KKV SERIES

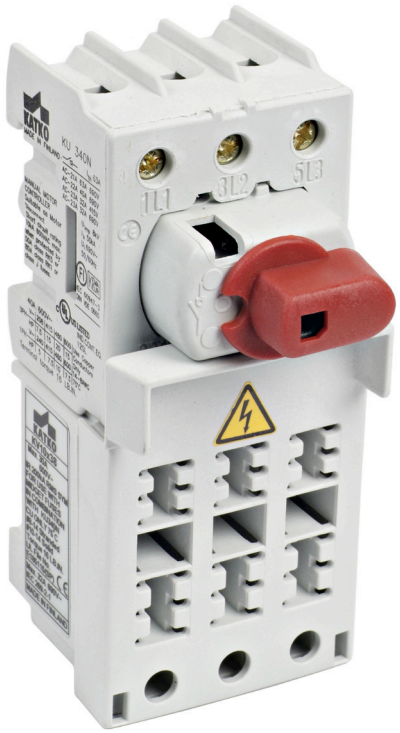

- Available as 1-, 2-, 3- and 4-pole
- Consists of a KU-switch and a KV 10 x 38 fuse holder
- Compatible with handles LK10 and LK11
- Shafts L=100/200/300 AD11 and L=100/200/300 AD11/VT

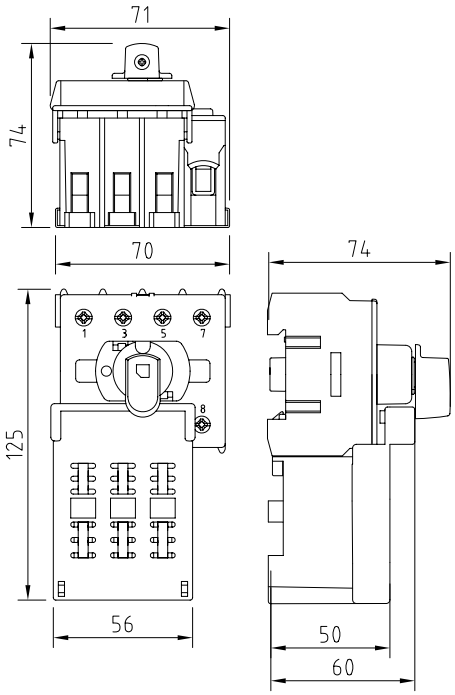

KKV

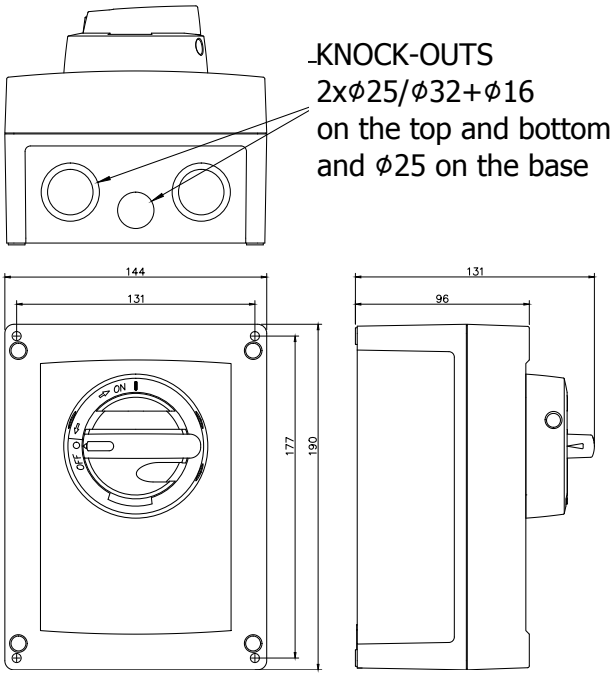

KKVM

Type	AC-22	AC-23	AC-23		690 V 690 V	EAN code	Weight kg
	400 V 415 V 690 V		400 V 415 V				
	I_e / A	I_e / A	P / kW	I_e / A	P / kW	6419410...	
3-pole							
KKV 316	16 A	16 A	7,5 kW	16 A	11 kW	...212608	0.318
KKV 325	25 A	25 A	11 kW	25 A	22 kW	...212707	0.318
KKV 332	32 A	32 A	15 kW	32 A	30 kW	...212806	0.318
4-pole							
KKV 416	16 A	16 A	7,5 kW	16 A	11 kW	...212653	0.362
KKV 425	25 A	25 A	11 kW	25 A	22 kW	...212752	0.362
KKV 432	32 A	32 A	15 kW	32 A	30 kW	...212851	0.362

Data subject to change without notice

Dalroad are authorised UK distributors of Katko safety switches and isolators. Contact Dalroad for further information on the Katko range on 01582 505 252 or email sales@dalroad.com.