THIS DRAWING IS UNPUBLISHED.
VERTRAULICH - UNVEROEFFENTLICHTE ZEICHNUNG
© COPYRIGHT 2016 BY TE CONNECTIVITY
RELEASED FOR PUBLICATION 2016
FREI FUER VEROEFFENTLICHUNG
ALL RIGHTS RESERVED.
ALLE RECHTE VORBEHALTEN.

MATED WITH:
PASSEND ZU
-

THE DRAWING SHOWS THE 2-DIMENSIONAL REFERENCE COMPONENT CONDITION OF THE ASSEMBLY TO IDENTIFY AND SPECIFY THE NECESSARY DIMENSIONS ONLY. THE DELIVERED PARTS MAY DEVIATE FROM THE DRAWING REGARDING THE ORIENTATION AND POSITION OF EACH COMPONENT (e.g. SLACK CABLE). SO FAR THE FUNCTIONALITY IS NOT CONCERNED.

DIE ZEICHNUNG ZEIGT DEN 2-DIMENSIONALEN IDEALZUSTAND DES ZUSAMMENBAUTEILS BEZUEGLICH DER KOMPONENTEN ZUR IDENTIFIKATION UND SPEZIFIKATION DER NOTWENDIGEN DIMENSIONEN. HINSICHTLICH DER ORIENTIERUNG UND DER LAGE DER KOMPONENTEN (z.B. BIEGESCHLAFFES KABEL) KOENNEN DIE GELIEFERTEN TEILE VON DER ZEICHNUNG ABWEICHEN. SOFERN DIE FUNKTIONALITAET NICHT BEEINTRAECHTIGT IST.

PROJEKT NR.:
PRJ-10-00000314 2

REVISIONS
AENDERUNGEN

P	LTR	DESCRIPTION BESCHREIBUNG	DATE	DWN	APVD
	B3	ADDED NEW VARIANTS	29NOV2018	OS	OB
	B4	NEW VARIANT (4- -6) ADDED	23MAY2019	JM	OB

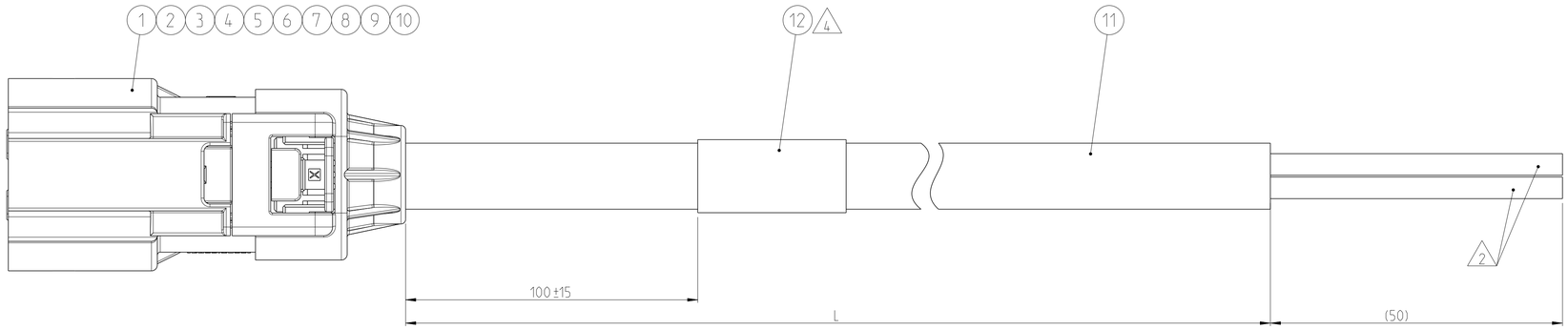

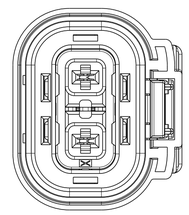

WIRING SCHEDULE:
Belegungsplan:

CAVITY-NO.	WIRE COLOUR
1	red (rot)
2	black (schwarz)

LENGTH SCHEDULE:
Laengentabelle:

TE PART NO.	REV.	LENGTH L (mm)	TOL. (mm)	CODING
1-2208103-0	B	500	+30	A
1-2208103-1	B	1000	+30	
1-2208103-2	B	2000	+35	
1-2208103-3	B	3000	+40	
1-2208103-4	B	4000	+50	
1-2208103-5	B	5000	+60	
1-2208103-6	A	6000	+65	
1-2208103-7	A	7000	+65	
1-2208103-8	A	8000	+70	
2-2208103-0	B	500	+30	B
2-2208103-1	B	1000	+30	
2-2208103-2	B	2000	+35	
2-2208103-3	B	3000	+40	
2-2208103-4	B	4000	+50	
2-2208103-5	B	5000	+60	
2-2208103-6	A	6000	+65	
4-2208103-0	B	500	+30	D
4-2208103-1	B	1000	+30	
4-2208103-2	B	2000	+35	
4-2208103-3	B	3000	+40	
4-2208103-4	B	4000	+50	
4-2208103-5	B	5000	+60	
4-2208103-6	A	6000	+70	
5-2208103-0	B	500	+30	E
5-2208103-1	B	1000	+30	
5-2208103-2	B	2000	+35	
5-2208103-3	B	3000	+40	
5-2208103-4	B	4000	+50	
5-2208103-5	B	5000	+60	
6-2208103-0	B	500	+30	F
6-2208103-1	B	1000	+30	
6-2208103-2	B	2000	+35	
6-2208103-3	B	3000	+40	
6-2208103-4	B	4000	+50	
6-2208103-5	B	5000	+60	

B4

LABEL LEGEND:
Label Beschriftung:

TE
TE PN: X-2208103-Y Rev. __
DD/MM/YY
2.7 kV DC TEST PASSED

CURRENT REV.
Aktuelle Rev.

DATE CODE
Datum

NOTES

1 PACKAGING:
ASSEMBLIES PACKED IN TE STANDARD BOXES WITH INTERMEDIATE LAYERS OF CORRUGATED PAPER OR PAPER STUFFING (TE SPEC. 107-18032). DAMAGED TO BE AVOIDED.

2 ELECTRICAL TEST ACCORDING TE SPECIFICATION 108-18857. CHAPTER 3.3. USE CURRENT REVISION ALWAYS. STRIPPED ONLY OUTER JACKET. FOIL AND BRAID.

3 TE PRODUCT SPECIFICATION:
108-18513 (MCP 2.8)

4 MANUFACTURING CODE:
TE PART NO., CURRENT REV. LEVEL AND DATE CODE (DD.MM.YY). TO BE PRINTED ON LABEL (ITEM 12). LABEL TO BE APPLIED TO THE CABLE AFTER SUCCESSFUL ELECTRICAL TEST.

B4

QTY 6- -5	QTY 6- -4	QTY 6- -3	QTY 6- -2	QTY 6- -1	QTY 6- -0	QTY 5- -5	QTY 5- -4	QTY 5- -3	QTY 5- -2	QTY 5- -1	QTY 5- -0	QTY 4- -6	QTY 4- -5	QTY 4- -4	QTY 4- -3	QTY 4- -2	QTY 4- -1	QTY 4- -0	QTY 2- -6	QTY 2- -5	QTY 2- -4	QTY 2- -3	QTY 2- -2	QTY 2- -1	QTY 2- -0	QTY 1- -8	QTY 1- -7	QTY 1- -6	QTY 1- -5	QTY 1- -4	QTY 1- -3	QTY 1- -2	QTY 1- -1	QTY 1- -0	DESCRIPTION	ITEM NO.
1	1	1	1	1	1	1	1	1	1	1	1	1	1	1	1	1	1	1	1	1	1	1	1	1	1	1	1	1	1	1	1	1	1	1	LABEL. HELL. TYP 323. 25.4 x 95.25 mm	12
- mm	- mm	- mm	- mm	- mm	- mm	- mm	- mm	- mm	- mm	- mm	- mm	- mm	- mm	- mm	- mm	- mm	- mm	- mm	- mm	- mm	- mm	- mm	- mm	- mm	- mm	- mm	- mm	- mm	- mm	- mm	- mm	- mm	- mm	- mm	POWER CABLE. 2 x 4 qmm	11
1	1	1	1	1	1	1	1	1	1	1	1	1	1	1	1	1	1	1	1	1	1	1	1	1	1	1	1	1	1	1	1	1	1	1	CABLE SEAL RETAINER. SIZE A. HVA280-2PHM	10
1	1	1	1	1	1	1	1	1	1	1	1	1	1	1	1	1	1	1	1	1	1	1	1	1	1	1	1	1	1	1	1	1	1	1	COLLET. SIZE A. HVA280-2PHM	9
1	1	1	1	1	1	1	1	1	1	1	1	1	1	1	1	1	1	1	1	1	1	1	1	1	1	1	1	1	1	1	1	1	1	1	CABLE SEAL. SIZE A. HVA280-2PHM	8
1	1	1	1	1	1	1	1	1	1	1	1	1	1	1	1	1	1	1	1	1	1	1	1	1	1	1	1	1	1	1	1	1	1	1	SPACER. HVA280-2PHM	7
1	1	1	1	1	1	1	1	1	1	1	1	1	1	1	1	1	1	1	1	1	1	1	1	1	1	1	1	1	1	1	1	1	1	1	OUTER FERRULE. SIZE C. HVA280	6
1	1	1	1	1	1	1	1	1	1	1	1	1	1	1	1	1	1	1	1	1	1	1	1	1	1	1	1	1	1	1	1	1	1	1	INNER FERRULE. SIZE C. HVA280	5
2	2	2	2	2	2	2	2	2	2	2	2	2	2	2	2	2	2	2	2	2	2	2	2	2	2	2	2	2	2	2	2	2	2	2	SHIELD. PLUG. HVA280-2PHM	4
2	2	2	2	2	2	2	2	2	2	2	2	2	2	2	2	2	2	2	2	2	2	2	2	2	2	2	2	2	2	2	2	2	2	2	MCP-2.8 TERMINAL FEMALE	3
1	1	1	1	1	1	1	1	1	1	1	1	1	1	1	1	1	1	1	1	1	1	1	1	1	1	1	1	1	1	1	1	1	1	1	INNER HSG SUBASSY. HVA280-2PHM. SHUNTED	2
1	1	1	1	1	1	-	-	-	-	-	-	-	-	-	-	-	-	-	-	-	-	-	-	-	-	-	-	-	-	-	-	-	-	-	PLUG SUBASSY. HVA280-2PHM. KEY F	1
-	-	-	-	-	-	1	1	1	1	1	1	-	-	-	-	-	-	-	-	-	-	-	-	-	-	-	-	-	-	-	-	-	-	-	PLUG SUBASSY. HVA280-2PHM. KEY E	
-	-	-	-	-	-	-	-	-	-	-	-	1	1	1	1	1	1	1	-	-	-	-	-	-	-	-	-	-	-	-	-	-	-	-	PLUG SUBASSY. HVA280-2PHM. KEY D	
-	-	-	-	-	-	-	-	-	-	-	-	-	-	-	-	-	-	-	1	1	1	1	1	1	1	-	-	-	-	-	-	-	-	-	PLUG SUBASSY. HVA280-2PHM. KEY B	
-	-	-	-	-	-	-	-	-	-	-	-	-	-	-	-	-	-	-	-	-	-	-	-	-	-	1	1	1	1	1	1	1	1	1	PLUG SUBASSY. HVA280-2PHM. KEY A	
-	-	-	-	-	-	-	-	-	-	-	-	-	-	-	-	-	-	-	-	-	-	-	-	-	-	-	-	-	-	-	-	-	-	-	WEIGHT OF ASSY NO. lgl	

1- -0 AS SHOWN
wie dargestellt

TOLERANCING ISO 8015
TOLERIERUNG ISO 8015

DIESE ZEICHNUNG IST EIN KONTROLLIERTES DOKUMENT.
BEMASSUNGEN UND TOLERANZEN GEMAESS GPS (ISO STANDARDS).

THIS DRAWING IS A CONTROLLED DOCUMENT.
DIMENSIONING AND TOLERANCING PER GPS (ISO STANDARDS).

DIMENSIONS: MASSEINHEITEN: mm

TOLERANCES UNLESS OTHERWISE SPECIFIED: ALLGEMEINTOLERANZEN
0 PLC ±-
1 PLC ±-
2 PLC ±-
3 PLC ±-
4 PLC ±-
ANGLES/WINKEL ±-

MATERIAL - -
FINISH/OBERFLAECHE/FARBE - -

DWN M. Zelch 24APR2012
CHK J. Bernstorf 24APR2012
APVD M. Folk 26APR2012

PRODUCT SPEC PRODUKTSPEC. - - -
APPLICATION SPEC VERARBEITUNGSSPEZ. -
WEIGHT GEWICHT -

TE Connectivity

NAME 2 POS. HVA. 2 PHM. SHUNTED. HYB ASSY - - -

SIZE A1 | CAGE CODE 00779 | DRAWING NO ZEICHNUNGS-NR. C-2208103 | RESTRICTED TO NUR FUER

CUSTOMER DRAWING /KUNDENZEICHNUNG | SCALE MASSSTAB 2:1 | SHEET BLATT 1 OF VON 1 | REV. B4

4805 (3/13)